RT-1000
RECESSED THRESHOLD
INSTALLATION

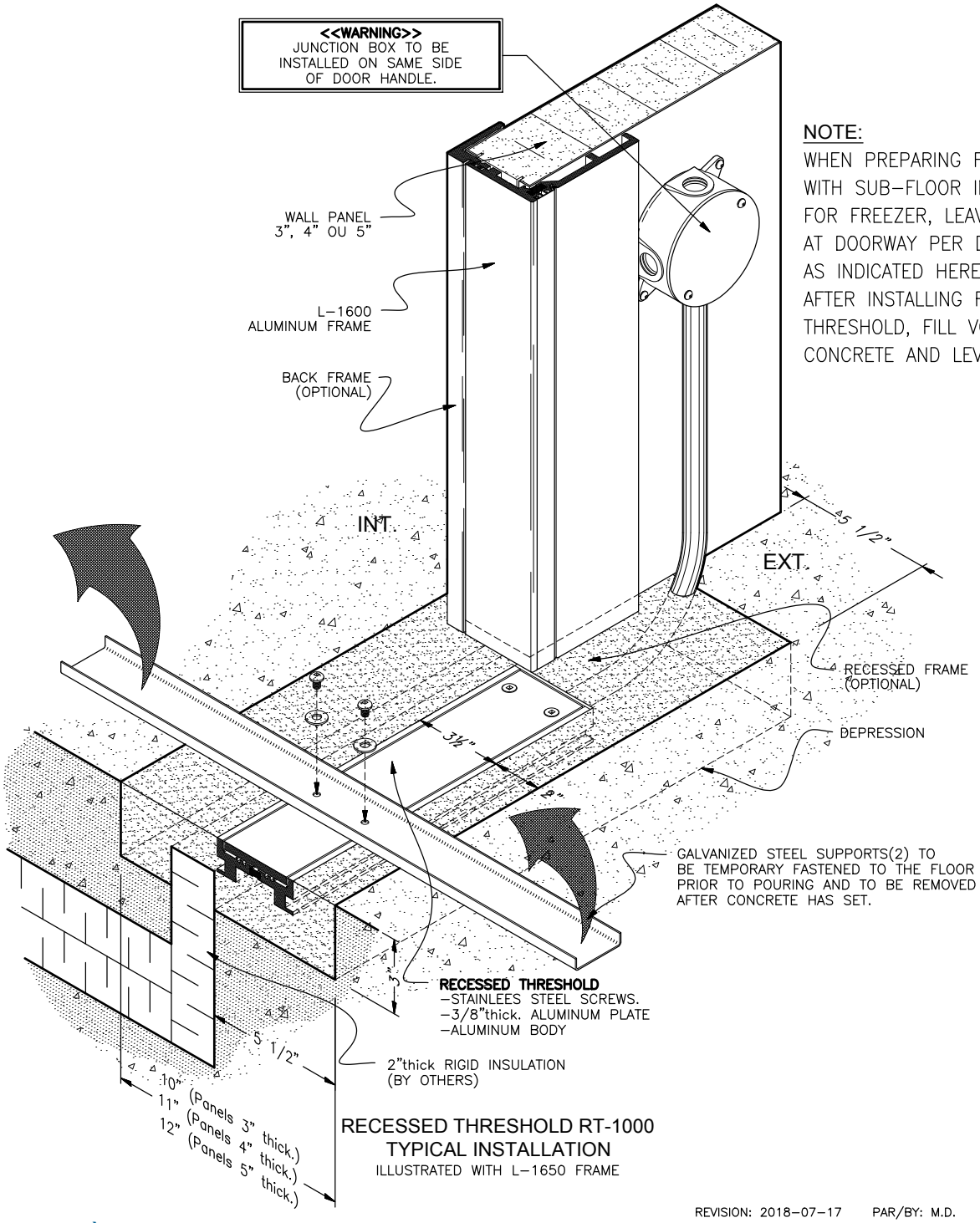

NOTE:
WHEN PREPARING FLOOR WITH SUB-FLOOR INSULATION FOR FREEZER, LEAVE **VOID** AT DOORWAY PER DIMENSION AS INDICATED HERE (DEPRESSION). AFTER INSTALLING RECESSED THRESHOLD, FILL VOID WITH CONCRETE AND LEVEL TO GRADE.

RECESSED THRESHOLD RT-1000
TYPICAL INSTALLATION
ILLUSTRATED WITH L-1650 FRAME

REVISION: 2018-07-17 PAR/BY: M.D.

DESSIN: U:\Commun\Technique\Block\Catalogue_Norbec\Details_Installation\Seuil_Encastré_L-1650

SYSTÈMES NORBEC INC.
97 de Vaudreuil, Boucherville, Quebec, Canada, J4B 1K7 - Tél.:(450) 449-1499 - Fax:(450) 641-4657 - Internet: http://www.norbec.com