E-CIRCUIT – User Manual and Installation Guide

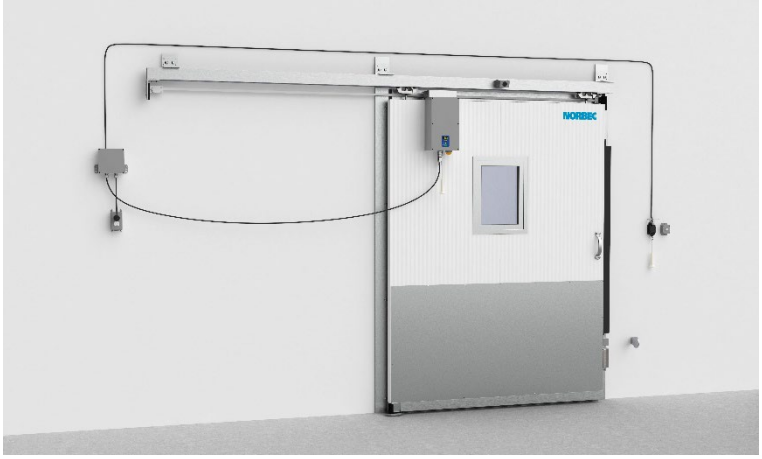

97, rue de Vaudreuil,

Boucherville (Quebec) J4B 1K7

Phone: (450) 449-1499 Fax: (450) 641-4657

Toll-free: 1 877 667-2321

**** IMPORTANT ****

PLEASE READ PRIOR TO

INSTALLATION AND START UP

Table of contents

Overview of the **E-Circuit**

The **E-Circuit** is a system for automating the opening and closing of **Norbec** CL sliding doors.

The system consists of a transformer and a motor.

- 120-Vac, 60 Hz power supply
- 24-Vdc motor

Standard accessories:

- Anti-pinch safety edge
- Pull cord switches (×2)

Optional accessories:

- Radio-controlled push button
- Radio-controlled pull switch
- Contactless opening motion detector
- Photoelectric safety barrier

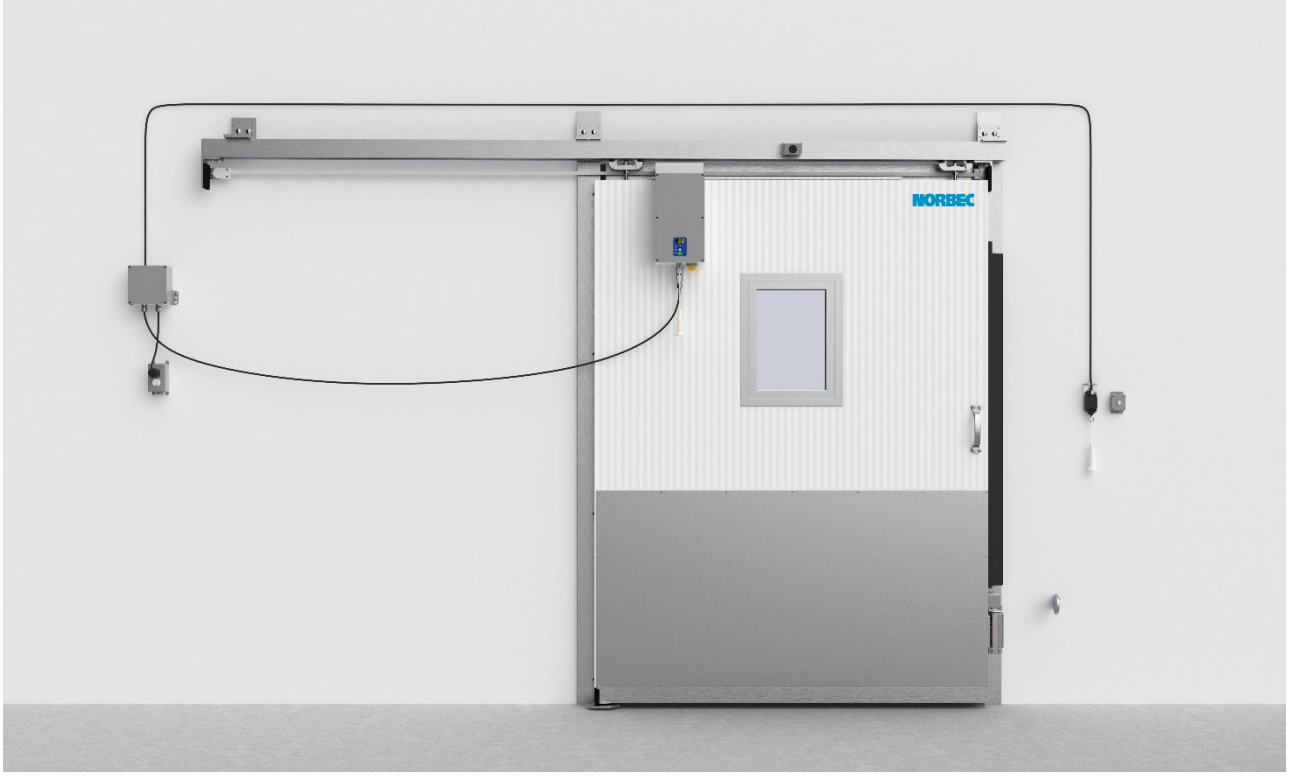

Installation Guide – **E-Circuit** Retrofit

Installation of an E-Circuit Electrical System on an Existing Norbec CL Door

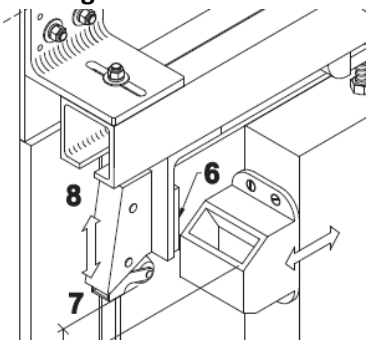

1. Remove the end stops at each end, as well as the cast-iron latch stop.

2. Remove the door from the rail to gain access to the top of the door.

3. If necessary, cut the galvanized U-shaped reinforcement @19'' from the edge opposite, to clear the screwing area.

4. Screw in the motor mounting block on the top of the door @ 14 in. from the edge opposite the opening.
   6 × #14 self-drilling metal screws × 1-in. hex head

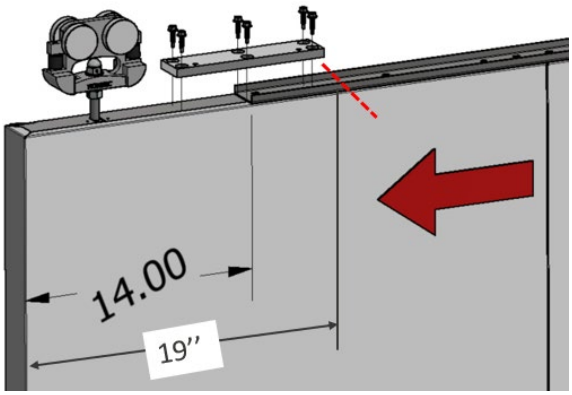

5. Add the pulley assembly
   2 × M8×1.25, 16 mm bolt
   2 × M8 lock washer

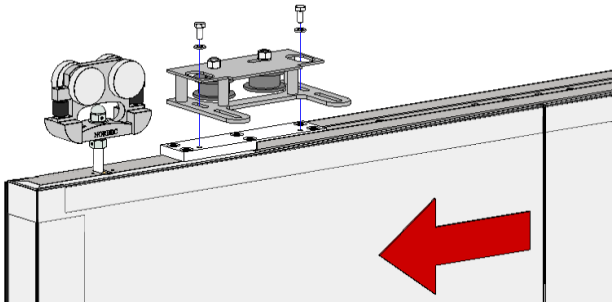

6. Assemble the motor housing
   2 × M8×1.25, 12 mm bolt
   2 × M8 flat washer

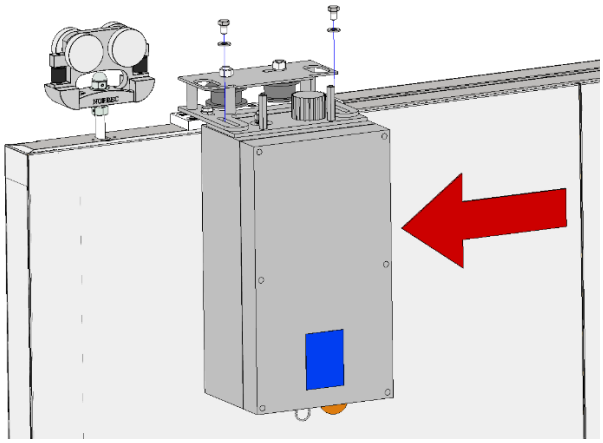

Installation Guide – Installation of the Electrical System Components

For the installation of the sliding door and frame, refer to the *CL-1650 sliding door installation guide* annexed to this document.

Installation of the Electrical System Components

1. Install the end stop assemblies.

Latch stop – Left opening

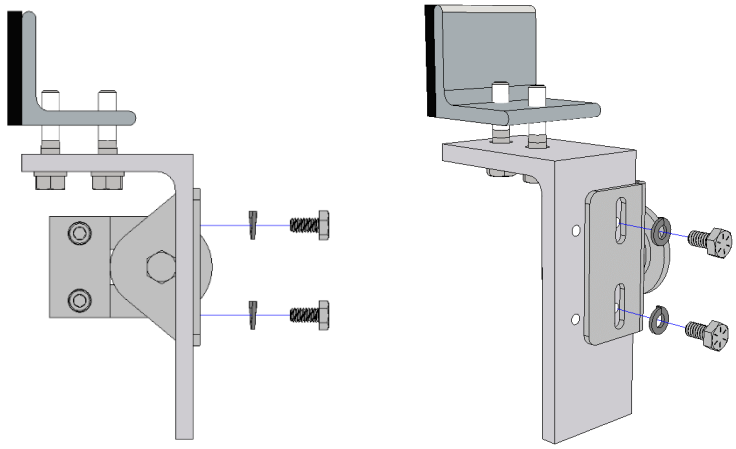

Opening stop – Left opening

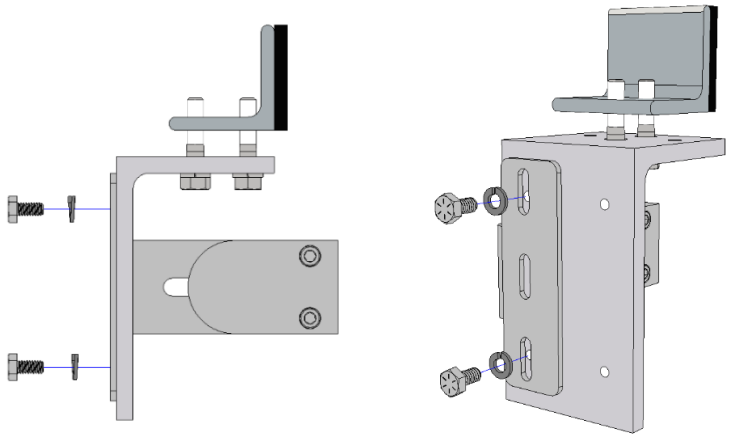

Latch stop – Right opening

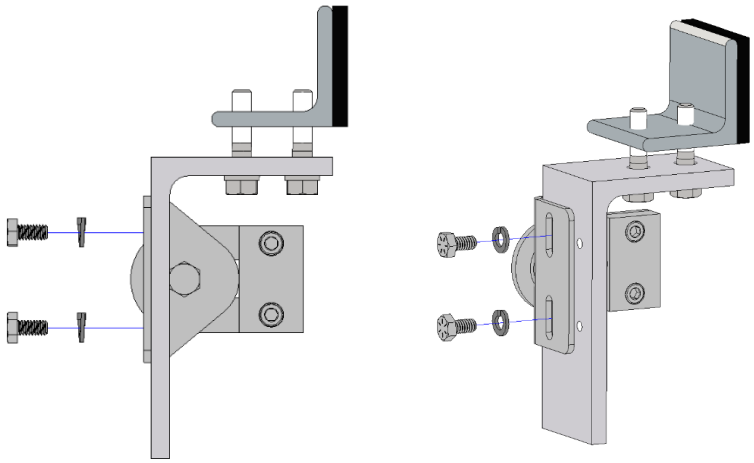

Opening stop – Right opening

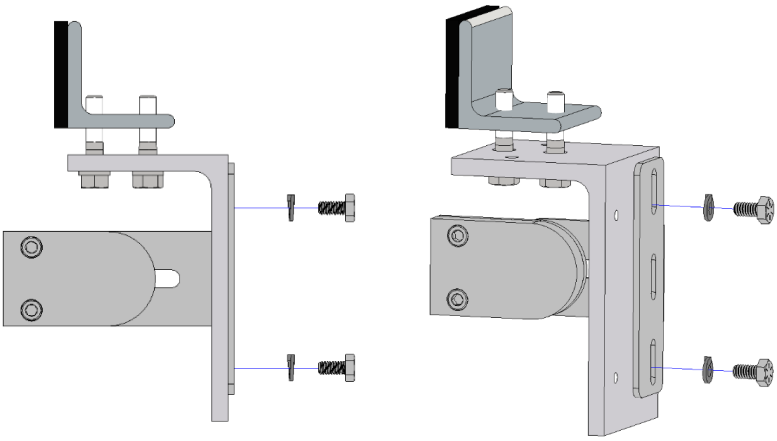

2. Attach the end of the belt to the small anchor on the door's closing side.

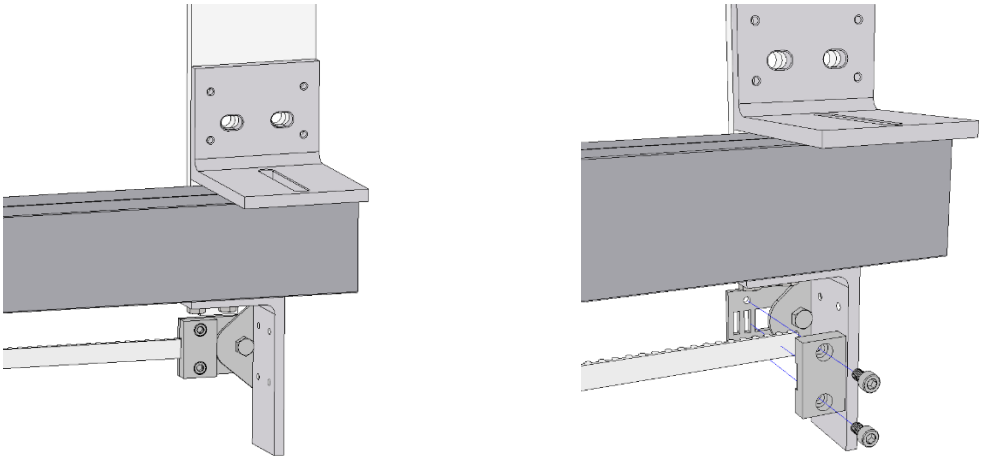

3. Run the belt through the pulley assembly and around the gear.

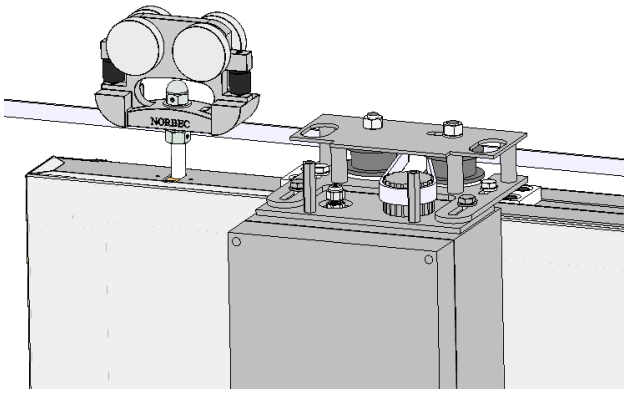

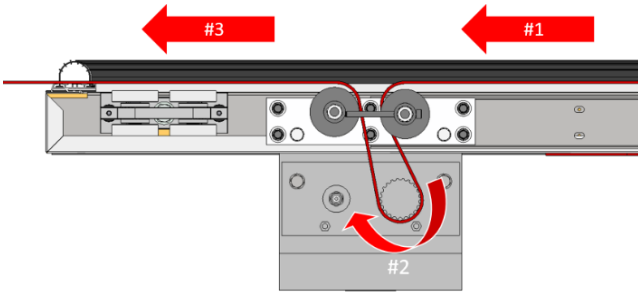

4. Unscrew the movable pulley as much as possible with a 5 mm Allen key to move the pulley to the right (5 mm ± 3/16 in.).

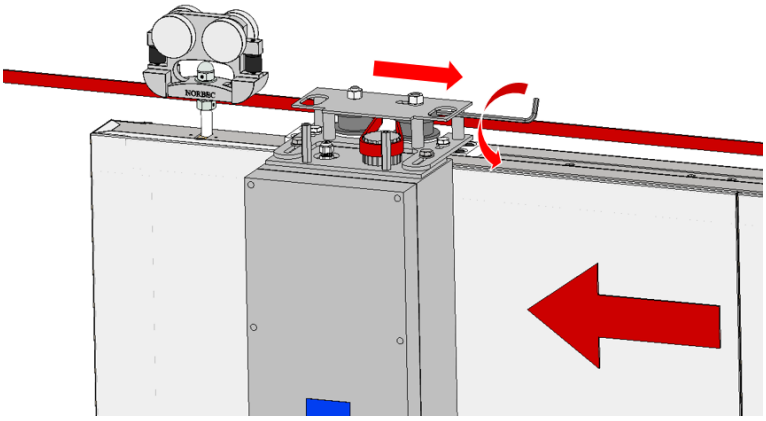

5. Attach the other end of the belt to the anchor on the door's opening side.
   Mark the length of the belt and cut off the excess.
   To facilitate installation, push the door in the opening direction to maintain tension on the first section of the belt.

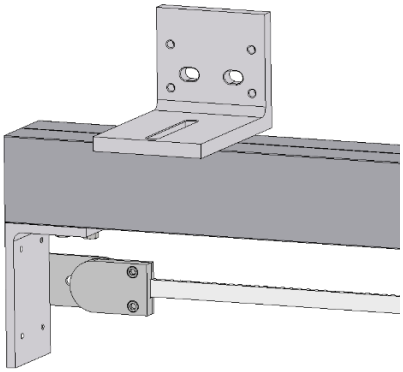

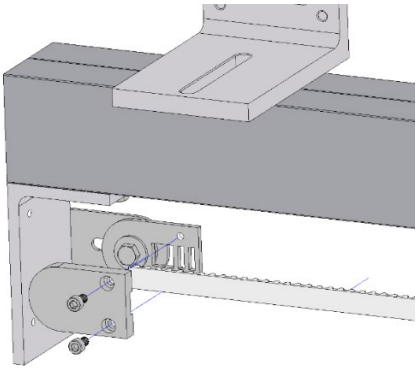

6. On the pulley assembly, adjust the tension on the belt.
   Tighten with a 5 mm Allen key to move the adjustable pulley to the left.

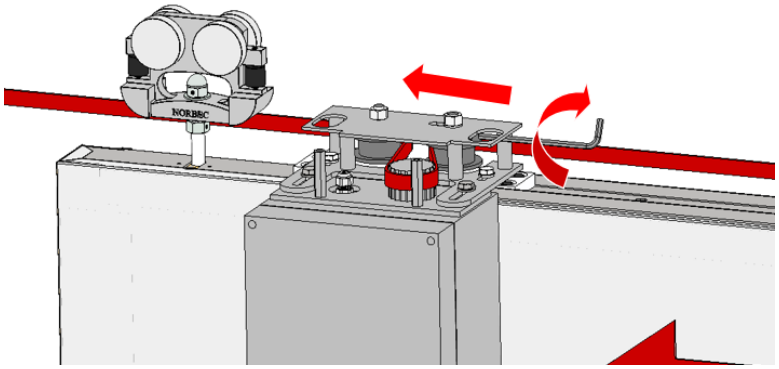

7. Hold the mobile pulley in position.
   17 mm wrench or adjustable wrench.

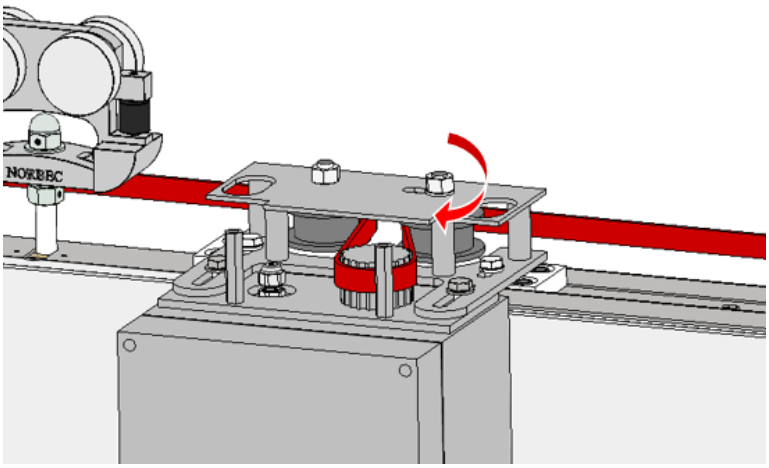

8. Add the cover to the pulley assembly.

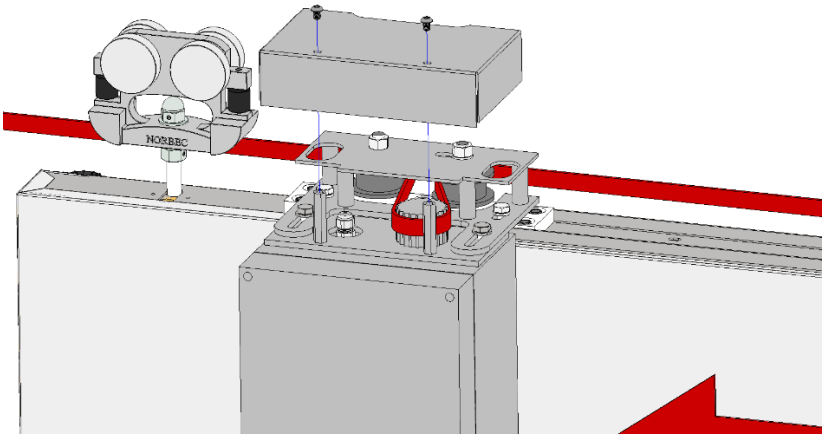

Installation Procedure – Pull Cord Switches (×2 Standard)

Pull cord switches come with a cable length of 240 in. [600 cm].

1. Position the switches in the desired locations.
2. Run the cables along to the transformer box.
3. Run the cables through the sealed grommet under the transformer.

4. Connection in the transformer according to the following connection diagram:
   See p. 18 for the complete **E-Circuit Wiring Diagram*

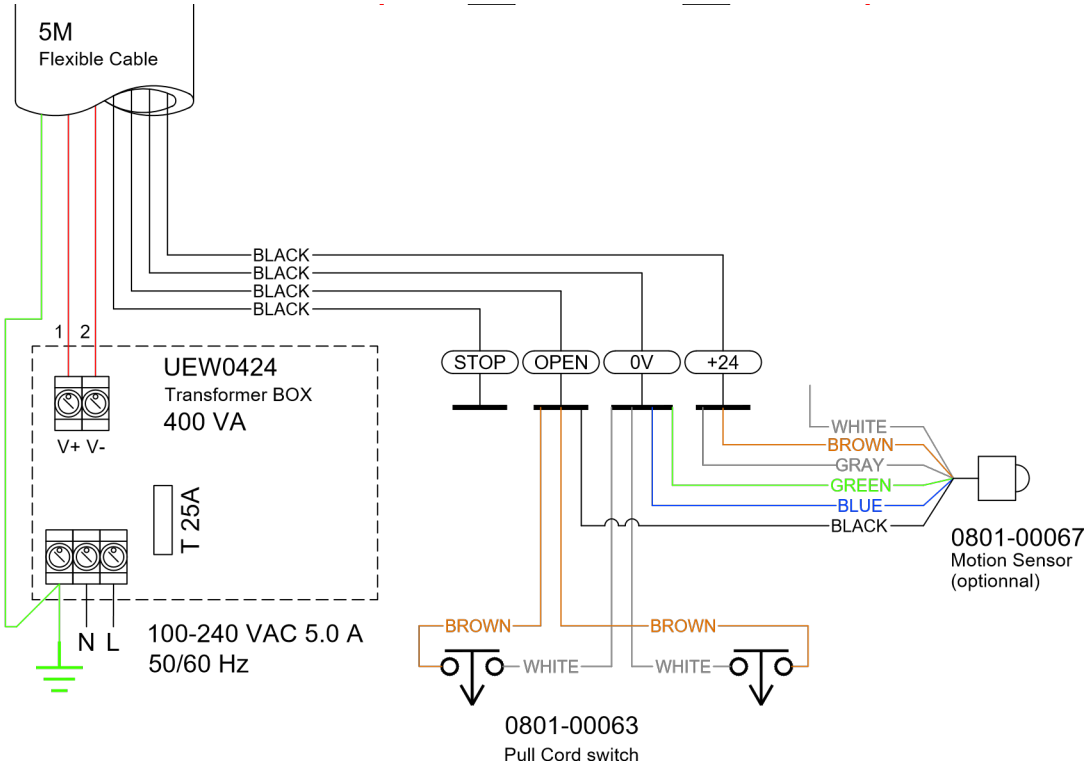

Installation Procedure – Anti-Pinch Safety Edge (Standard)

The anti-pinch safety edge installed on the door serves as a mechanical safety edge.

Handle side

1. Attach plate A2 to the door jamb according to these dimensions:

A1	A2	A3
$16\,^{5}/_{8}''$	$44\,^{1}/_{2}''$	$72\,^{1}/_{8}''$
Bottom	Middle	Top

See p. 12 for the complete Installation Diagram – Anti-Pinch Safety Edge

2. Insert the safety edge onto plate A2 and secure it using holes A1 and A3.

3. Run the cabling along the edge and top of the door toward the motor housing, along the gasket.
   * Be careful not to expose the top corner of the door opposite the point of contact with the end stop.

4. Run the cable through the sealed grommet on the top of the motor.

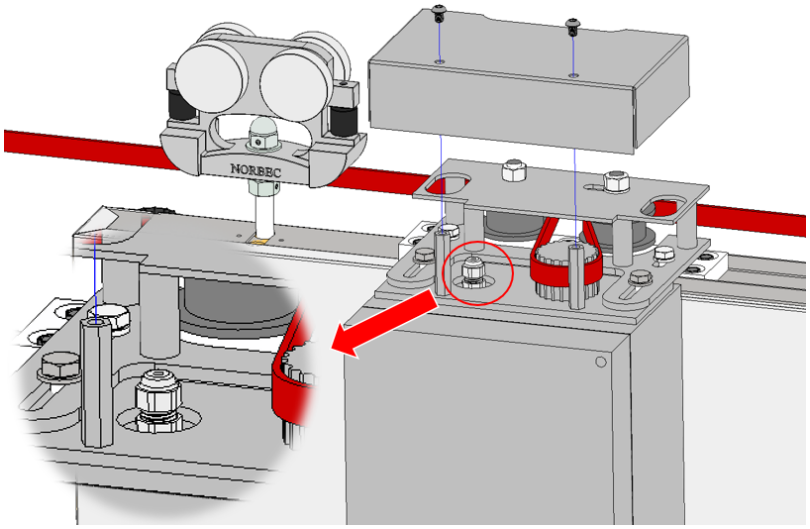

5. Connect the cables according to the following diagram.
   Terminal M5

See p.18 for the complete **E-Circuit Wiring Diagram*

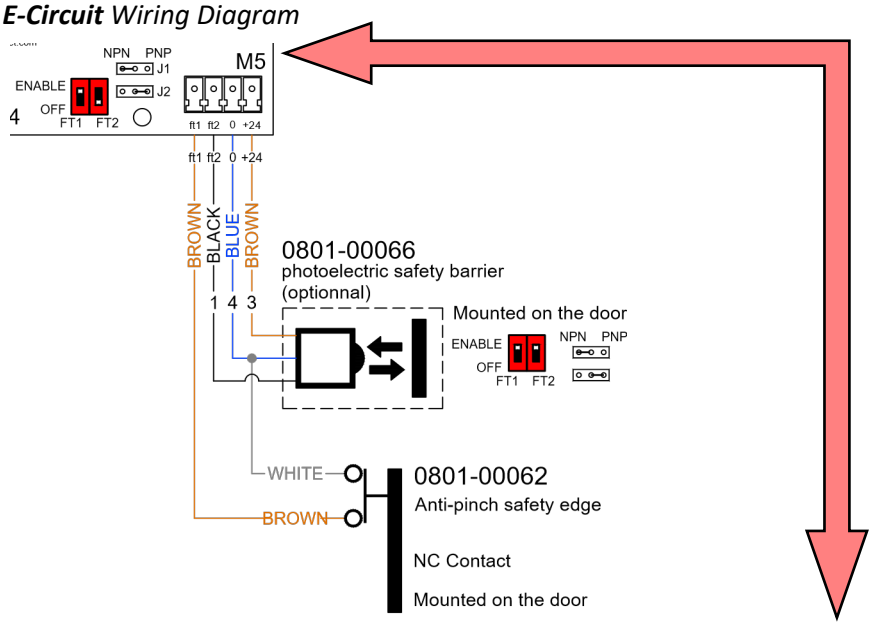

6. Select the switch and commutator near terminal M5 of the motor housing.

Option	Switch	Commutator	Diagram
Safety nose	FT1 = ENABLE *White switch*	#1: NPN	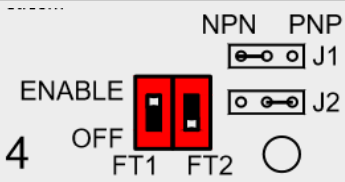

Figure 1: Installation Diagram – Anti-Pinch Safety Edge

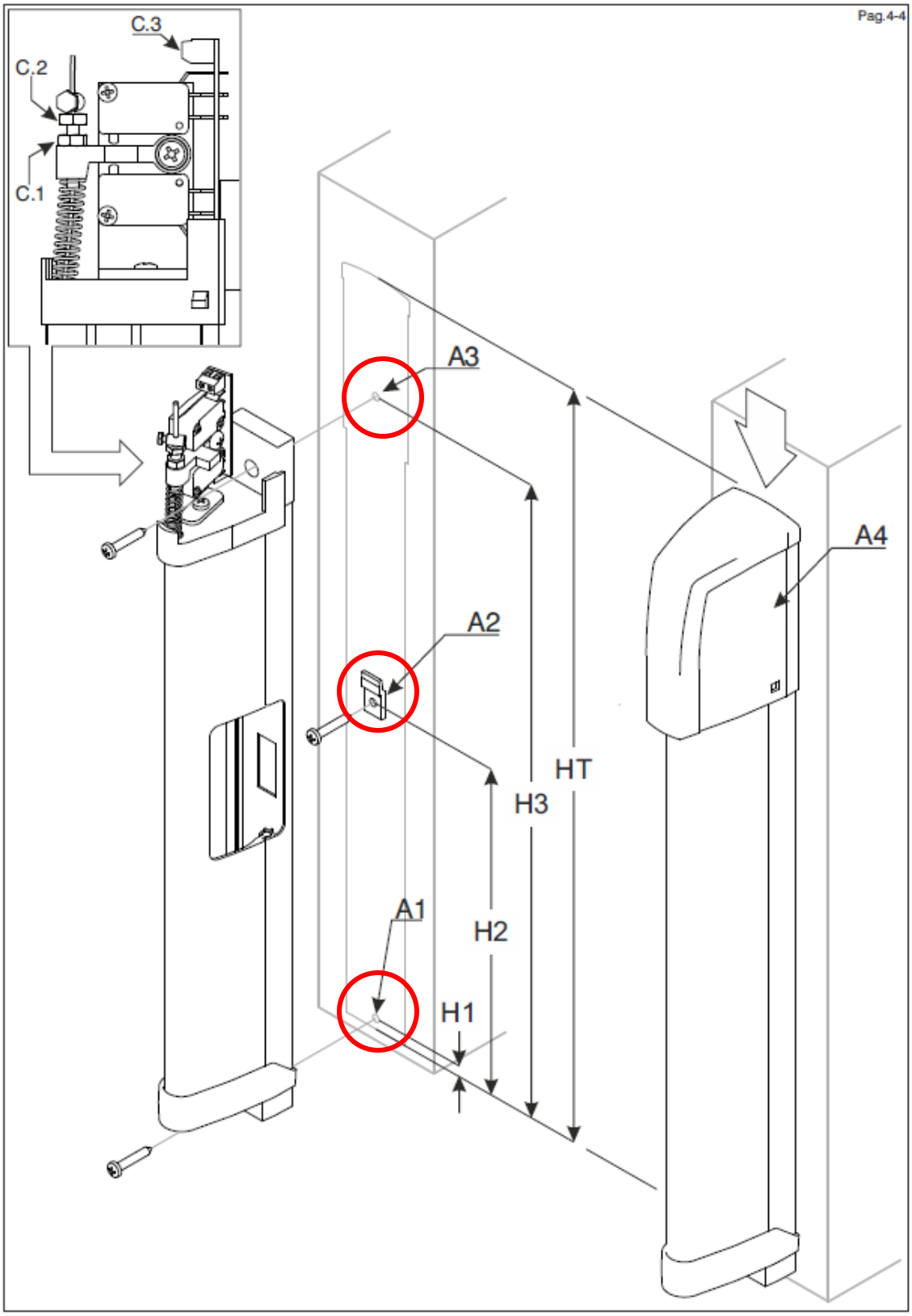

Synchronization Procedure – Radio-Controlled (Optional)

START command option:

Radio-controlled button ↓

Radio-Controlled pull switch ↓

Setup Steps

1. Power up the system.
2. Open the motor housing cover.
3. Press button P1 on the internal radio receiver once.
4. The LED light will turn on.
5. Activate the START command on the remote control.
    a. Button: Press for 2 seconds.
    b. Pull switch: Pull for 2 seconds.
6. When the control is released, the LED light turns off, indicating that the remote control has been memorized.
   If the remote control is not recognized, the LED light stays on for 10 seconds.
7. Repeat the steps for each remote control.

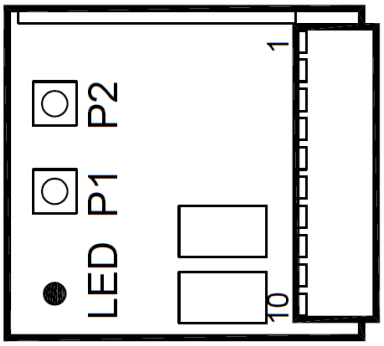

Internal radio receiver

Installation Procedure – Photoelectric Safety Barrier (Optional)

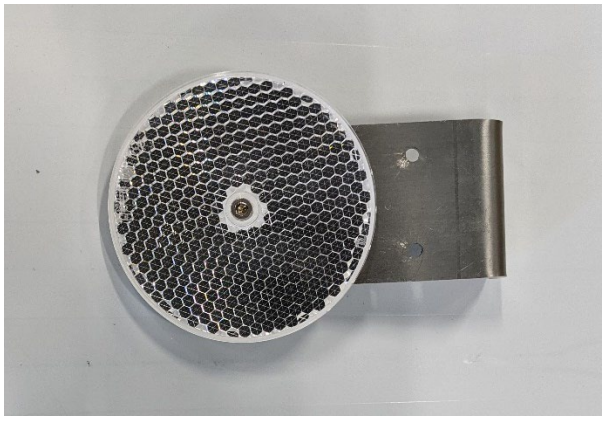

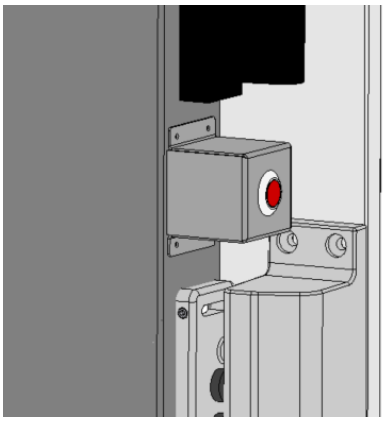

1. Screw the bracket and the sensor onto the door underneath the safety nose.
2. Run the cabling along the edge and top of the door toward the motor housing.
   Be careful not to expose the top corner of the door opposite the point of contact with the end stop.
3. Attach the reflector mirror so that it is in the sensor's field.

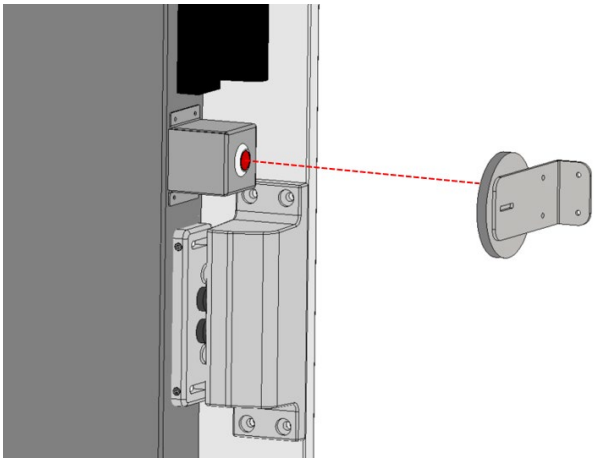

4. Run the cable through the sealed grommet on the top of the motor.

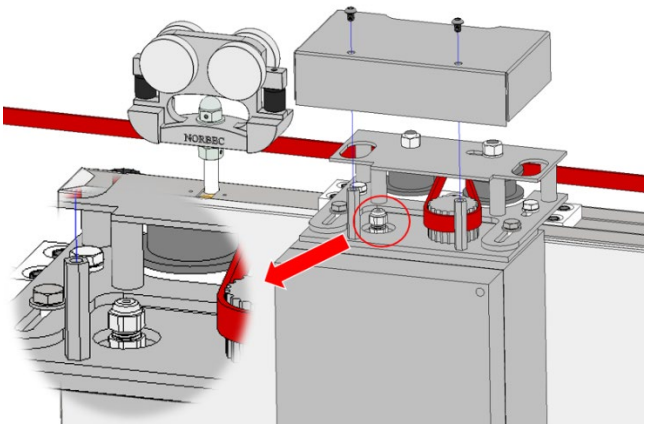

5. Connect the cables according to the following diagram.
   Terminal M5

See p. 18 for the complete **E-Circuit Wiring Diagram*

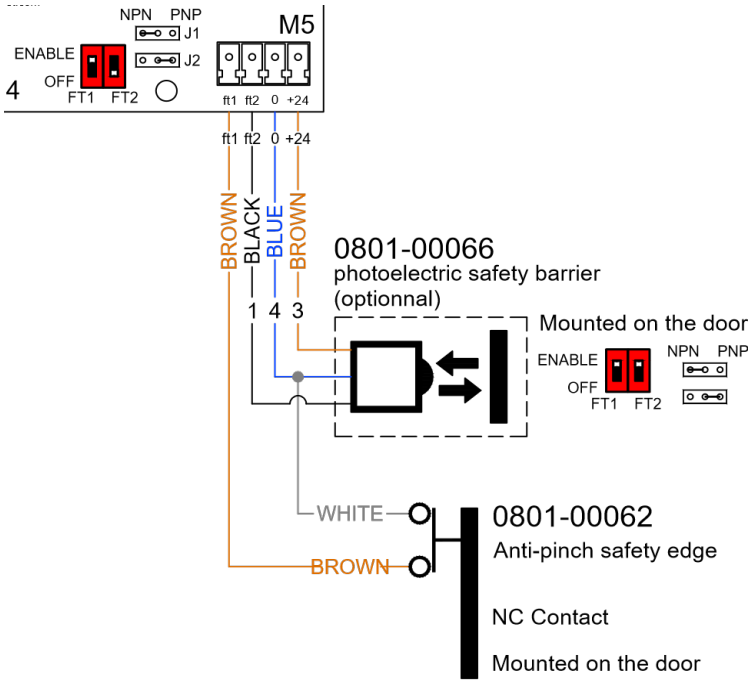

6. Select the switch and commutator near terminal M5 of the motor housing.

Option	Switch	Commutator	Diagram
Photoelectric barrier (optional)	FT1 = ENABLE FT2 = ENABLE *White Switch*	#2: PNP	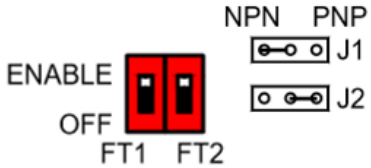

Installation Procedure – Contactless Opening Motion Sensor (Optional)

The motion sensor comes with a cable length of 192 in. [500 cm].

1. Position the switches in the desired locations.
2. Run the cables along to the transformer box.
3. Run the cables through the sealed grommet under the transformer.

4. Connect to the transformer according to the following connection diagram:

See p. 18 for the complete **E-Circuit Wiring Diagram*

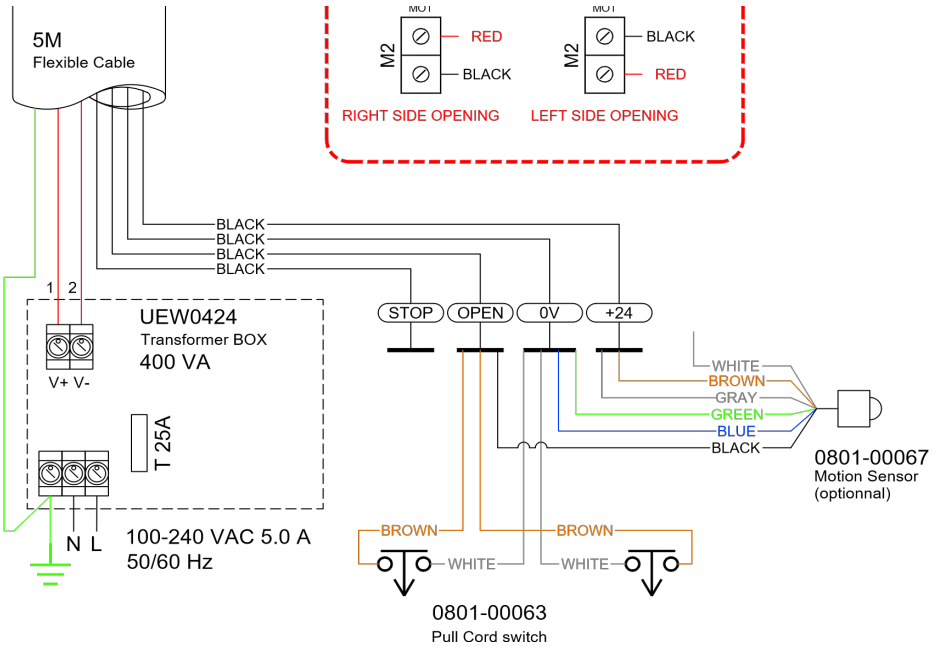

5. Follow the procedure for changing parameters and change parameter **RA** = 1.

6. Calibrate the operating distance.

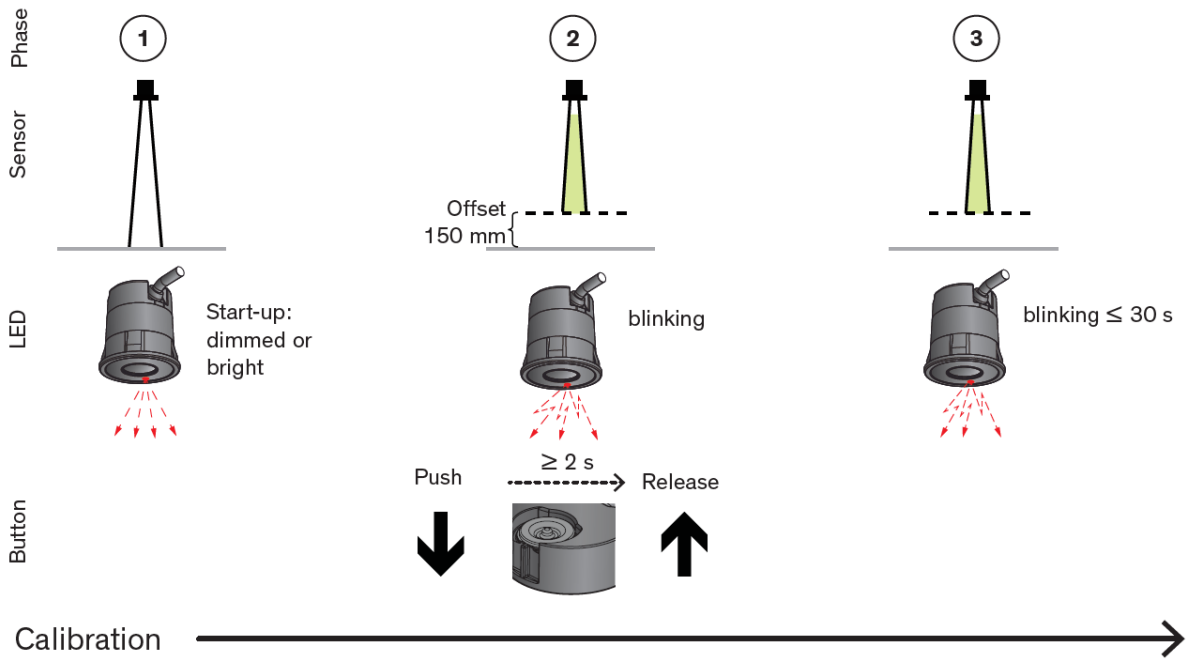

7. Operates as follows.

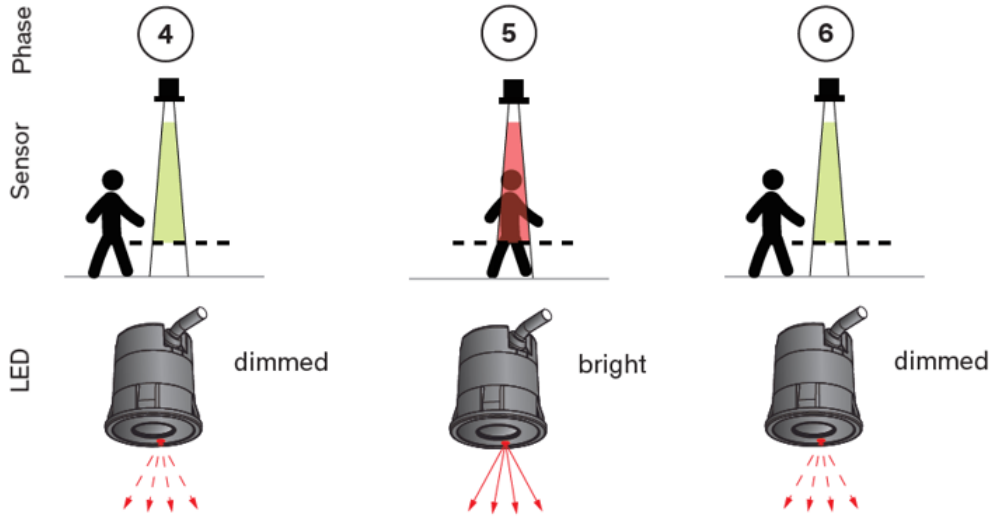

E-Circuit Wiring Diagram

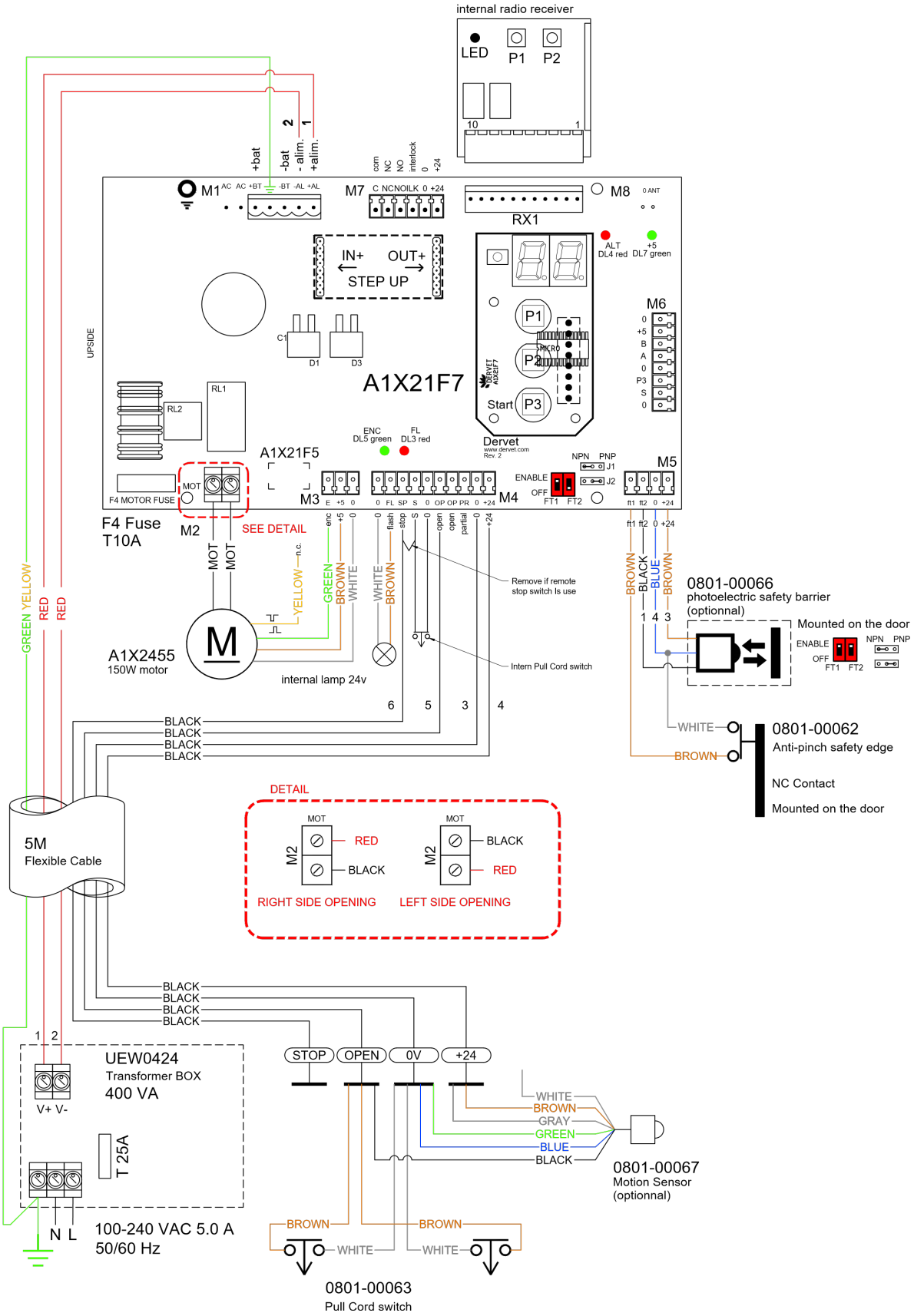

User Manual

Operating and Configuration Instructions

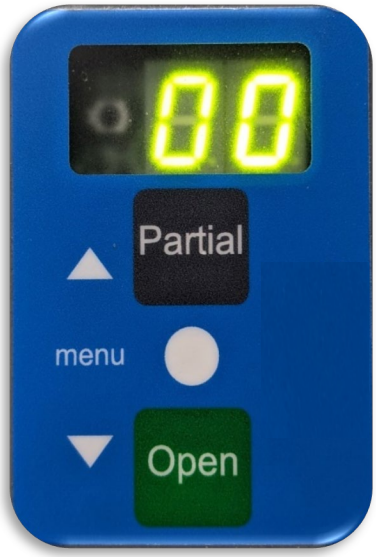

← **Keypad**
P1 - Partial
P2 - Menu
P3 - Open

Housing →
Pull switch – Start

Display
During normal operation, the screen displays the following information:

Display	Description
OP	Door opening
CL	Door closing
ST	Door locked for latching
F	Photocells triggered
S	Stop button pressed
E1	First start or power restored after failure; press START to start the learning phase
E3	Accidental position loss or function change; press START to calibrate
E4	Double safety activation: remove the obstacle and press START to calibrate

When the door is closed, the screen shows the number of times the door has been opened (thousands).

When the door is open and closing is activated, the screen displays the countdown of the remaining seconds before closing. [Adjustable, see Description of Configuration Parameters].

Electronic Obstacle Detection

Electronic obstacle detection is active when opening and closing. When it is operating, it reverses the door's movement without disabling automatic closure. If detection occurs twice consecutively, the door's movement is reversed by 4 in. [10 cm] and goes to the STOP position. Once the door's path has been cleared, press START and the door opens fully at reduced speed. Press START again to reactivate normal opening and closing.

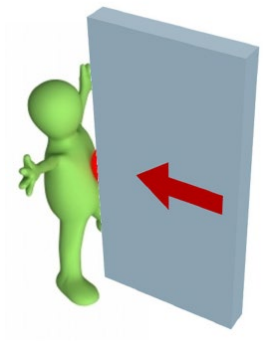

Description of Configuration Parameters

Opening Mode

When parameter **ST = 0**: Opening/Closure mode

After the START command:

Status	Action
The door is closed	The door opens.
The door is opening	The door stops and closes again.
The door is open	The door closes again.
The door is closing	The door stops and opens again.

When parameter **ST = 1**: Opening/Stop/Closure mode

After the START command:

Status	Action
The door is closed	The door opens.
The door is opening	The door stops and stays open; press START to close the door again.
The door is open	The door closes again.
The door is closing	The door stops and stays open; press START to open the door again.

If the automatic closure parameter is set to: **AU = 1**, after the START command, the pause time is restored before closing.

If the radar function parameter is set to **RA** = **1**, when the door is opening, the START command is ignored.

Automatic Closure

When parameter **AU = 1,** after the START command, the door will open and stay open for a time period defined by the pause time parameter, before closing again.

Radar Function (Motion Sensor Option)

When parameter RA = 1, when the sensor detects movement, the door will open and stay open for a time period defined by the pause time parameter, before closing again.

Partial Opening

By pressing the Partial button, the door will open partially based on parameter **LE**, the automatic closure parameter is ignored, and the door stays open until another start command is received.

Flashing Light

The light under the motor housing provides visual information on the door's operation.

- Door is open, the light will flash quickly for the time set in parameter **TF**, before starting the closing movement.
- Flashes slowly during closing and opening movement.
- Stays lit during the setup phase.
- Lights up if power is lost.
- Lights up if the door is partially open.
- Lights up if the safety edge detects an obstacle.

Anti-Pinch Safety Edge (Standard)

The anti-pinch safety edge installed on the door serves as a mechanical safety edge. When the edge comes into contact with an obstacle, the sensor makes the door stop the closing phase and reverse direction. The sensor corresponds to NPN-type switch FT1.

Photoelectric Safety Barrier (Optional)

The photocell sensor installed on the door and the mirror installed on the frame serve as an invisible barrier. When there is an obstacle in the doorway, the sensor makes the door stop the closing phase and reverse direction. The sensor corresponds to PNP-type switch FT2.

Connection Procedure

Electrical Connections

- Before connecting the power supply, make sure that the data on the nameplate is compatible with that of the distribution network.

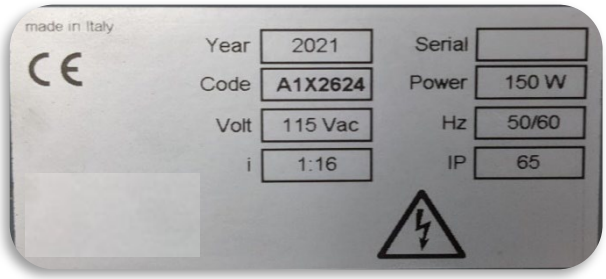

- The system power supply must be equipped with a circuit breaker in accordance with the regulations in force, located in an easily accessible and clearly identified location.
- The power supply must be equipped with a grounding system that complies with the regulations in force.
- During installation, maintenance, and repair work, disconnect the power supply before opening the cover to gain access to electrical parts.

Configuration of Safety Options

Before connecting the power supply, switches FT1 and FT2, as well as the commutators, near terminal M5 of the motor housing, must be adjusted depending on the options.

Option	Switch	Commutator	Diagram
Safety nose	FT1 = ENABLE *White switch*	#1: NPN	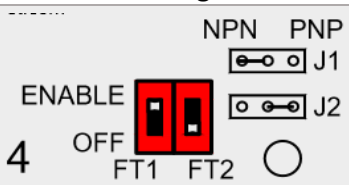
Photoelectric barrier (optional)	FT1 = ENABLE FT2 = ENABLE *White Switch*	#2: PNP	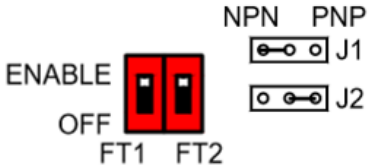

Configuration of the Opening Direction

Adjust the position of the motor encoder cables on terminal M2.

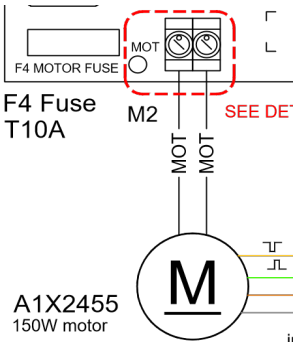

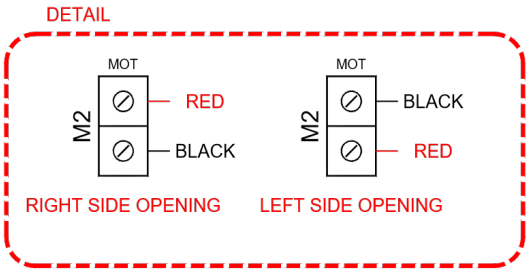

Procedure for Changing Parameters

1. Make sure that the power supply is disconnected.
2. Open the door manually by about 20 in. [50 cm].
3. Power up the system.
4. The screen will display **E1.**
5. Press button P2 – Menu to enter setup mode; the door's movement is inhibited and the screen displays the first parameter **AU.**
   **See p. 23 for Table of Configuration Parameters*
6. Press button P2 – Menu to go to the next parameters.
7. Press button P1 – Partial to increase the parameter value or P3 – Open to decrease the parameter value.
8. Press button P2 – Menu to save the new value and go back to the parameters menu.
9. To exit setup mode, select parameter **--** and press button P1 – Partial.
10. Press one of the openings commands – START, the door will open fully; after a second break, the door will close fully and end the learning phase.

Running the Learning Phase After a Power Failure

When the device is turned on after a power failure, the screen will display **E1** and the light will turn on. You must:

1. Open the door manually by about 20 in. [50 cm], if the door is closed.
2. Press one of the openings commands – START, the door will open fully; after a second break, the door will close fully and end the learning phase.

Table of Configuration Parameters

Parameter	Display	Value	Description	Default Value
Automatic closure	**AU**	1	ON	**0**
		0	OFF	
Pause time	**Tc**	0–30	[sec] Pause time before automatic closure	**4**
Flashing time	**TF**	0–10	[sec] Flashing time before closing movement	**2**
Assisted opening	**UE**	0	OFF	**1**
		1	Partial opening when manually moving the door	
Partial opening	**LE**	0–9	0 = 31 in. [80 cm]; 1 = 35 in. [90 cm]; 2 = 39 in. [100 cm]; 3 = 43 in. [110 cm]; 4 = 47 in. [120 cm]; 5 = 51 in. [130 cm]; 6 = 55 in. [140 cm]; 7 = 59 in. [150 cm]; 8 = 63 in. [160 cm]; 9 = 67 in. [170 cm].	**3**
*Forced closure**	*CA*	*0*	*OFF*	*0*
		1–4	*Closing force to improve watertight seal*	
Opening mode	**ST**	0	Opening/Closure	**0**
		1	Opening/Stop/Closure	
Radar	**rA**	0	OFF	**0**
		1	In the opening phase, the START command is ignored (motion sensor option)	
*Obstacle detection time**	*SE*	*0-2*	*0 = OFF; 1 = 10%; 2 = 20%*	*0*
Slow speed	**SL**	0-5	0 = very slow; 5 = maximum speed	**0**
Opening speed	**PA**	0-5	0 = very slow; 5 = maximum speed	**5**
Closing speed	**PC**	0-5	0 = very slow; 5 = maximum speed	**3**

Setup speed	**PP**	0–2	0 = very slow; 2 = maximum speed	**0**
*Reduction ratio**	*rd*	*1–99*	*Installed reduction ratio*	*16*
*Pulley diameter**	*dP*	*1–99*	*[mm] Pulley diameter*	*46*
*Encoder resolution**	*PE*	*0–4*	*0 = 4P; 1 = 6P; 2 = 8P; 3 = 12P*	*0*
Soft start	**SS**	0	OFF	**1**
		1–3	1 = 10%; 2 = 20%; 3 = 30%	
Soft stop	**Sb**	0	OFF	**1**
		1	ON	
*Alarm**	*AL*	*0*	*Relay activates when the door closes*	*1*
		1	*Relay activates when the door opens*	
Interlocking	*Bl*	*0*	*OFF*	*0*
		1	*ON*	
Zero distance search	*Oe*	*0–40*	*[mm] Reset the card to save*	*40*
Exit setup mode	**--**			

** Disregard for **E-Circuit***

Table of Alarms and Problems

Problem	Display	Cause	Solution
The door does not move.	The screen is off	Loss of power supply	Check the status of the electrical grid.
	The screen is off	Burned-out fuses.	Replace the fuses with the replacement fuses supplied with the electrical system.
	The screen is off	Electronic fault.	Maintenance request.
	The screen displays **S**	The STOP button is pressed.	Release the STOP button.
	The screen displays **F**	Safety options are obstructed or out of alignment.	Check the photoelectric barrier's alignment with the reflective mirror. Check that the anti-pinch safety nose is working properly.
	The screen displays **ST**	Interlocked door: another door in the network is open.	Wait until all the doors in the network have been closed.

	The screen displays **BT**	Buffer battery level too low; the system prevents movement when power levels are low.	Restore power from the electrical grid.
The door opens but does not close.	The screen displays **F**	Safety options are obstructed or out of alignment.	Check the photoelectric barrier's alignment with the reflective mirror. Check that the anti-pinch safety nose is working properly.
	The screen displays a countdown	Automatic closure has been programmed with a long time delay.	Set the value of the **Tc** parameter to suit your needs.
The door moves a few inches and stops.		The encoder is faulty or disconnected.	Maintenance request.
The door does not exit the learning phase.	The screen displays **E1**	Door width less than 47 in. [1,200 cm]. Parameters reduction ratio, pulley diameter, or encoder resolution are incorrect.	Check the parameter values: **PE**, **rD**, and **PE**
	The screen displays **F**	Safety options are obstructed or out of alignment.	Check the photoelectric barrier's alignment with the reflective mirror. Check that the anti-pinch safety nose is working properly.
During the learning phase, the door opens slowly until it stops, but does not close.	The screen displays **E1**	The electronics are faulty.	Maintenance request.
The range of the remote control is very low		The radio receiver is disconnected or missing.	Replace the radio receiver.

Annex 1 – E-circuit Wiring Diagram : 2021-04 @ 2023-03

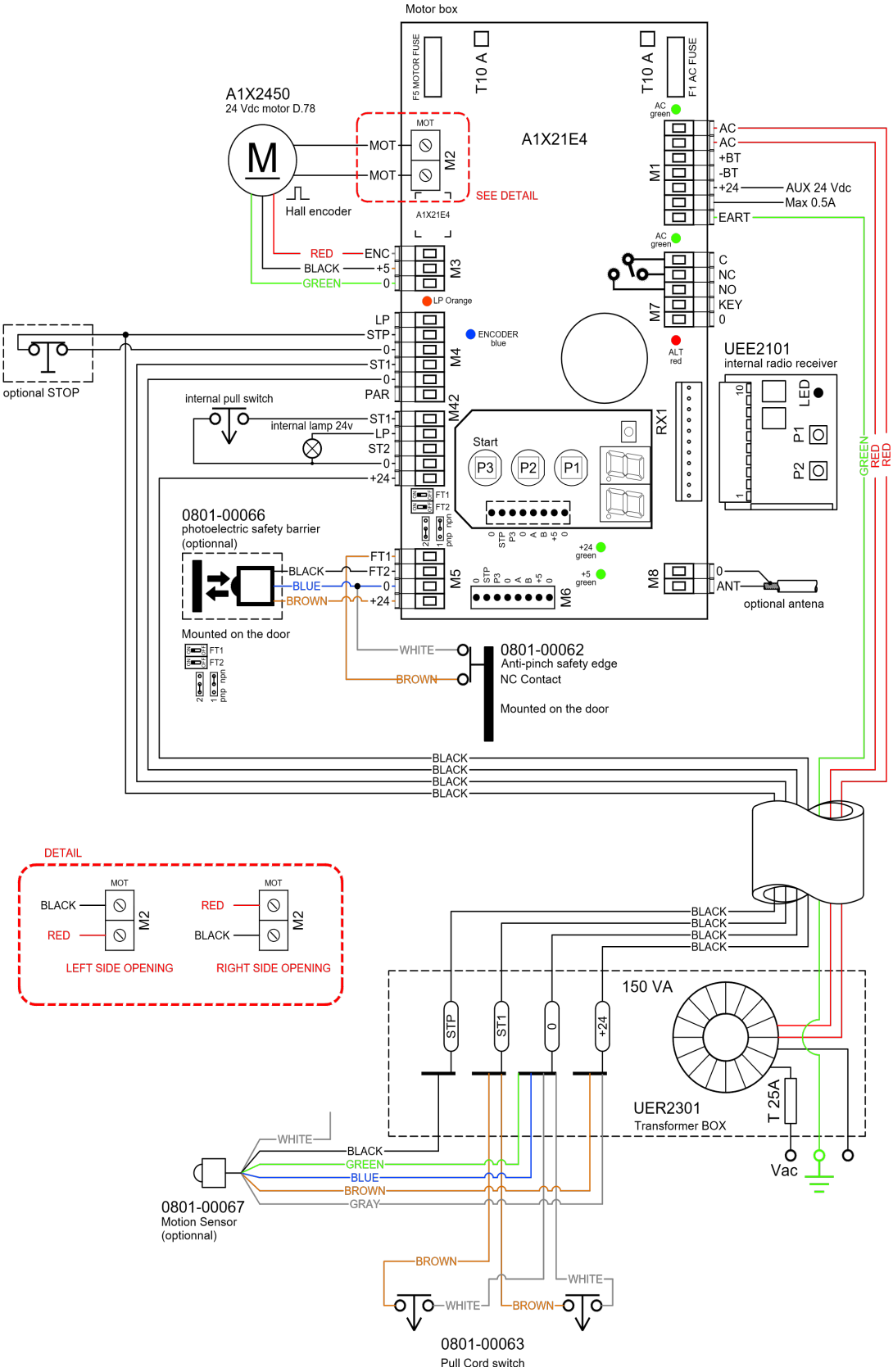

Annex – Installation guide CL-1650

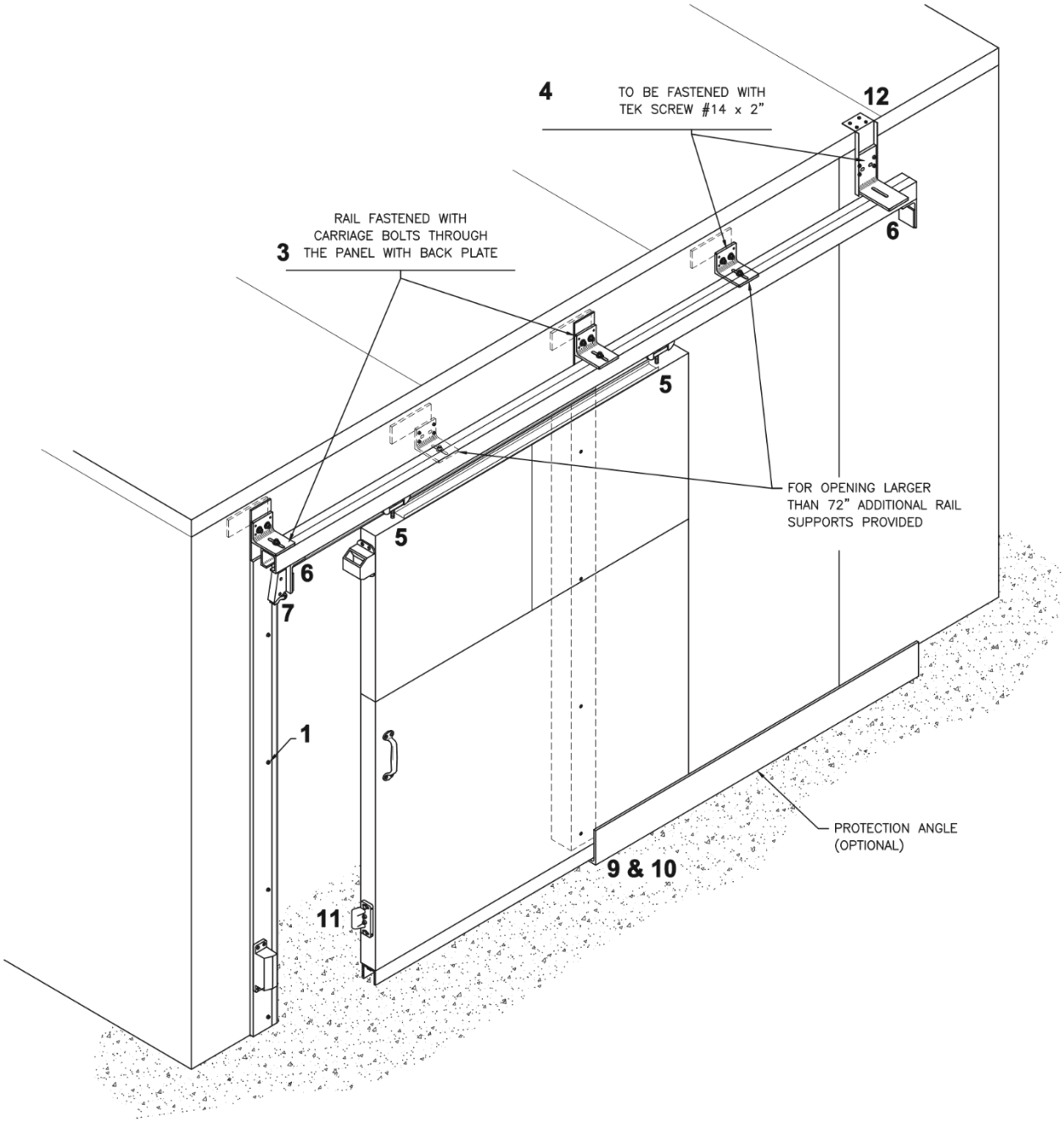

**NOTE:
FOR INSTALLATION ON PANELS
WITHOUT REINFORCEMENT THE
RAIL SUPPORT MUST BE FASTENED
WITH CARRIAGE BOLTS THROUGH
THE PANEL WITH ALUMINIUM
BACK PLATE

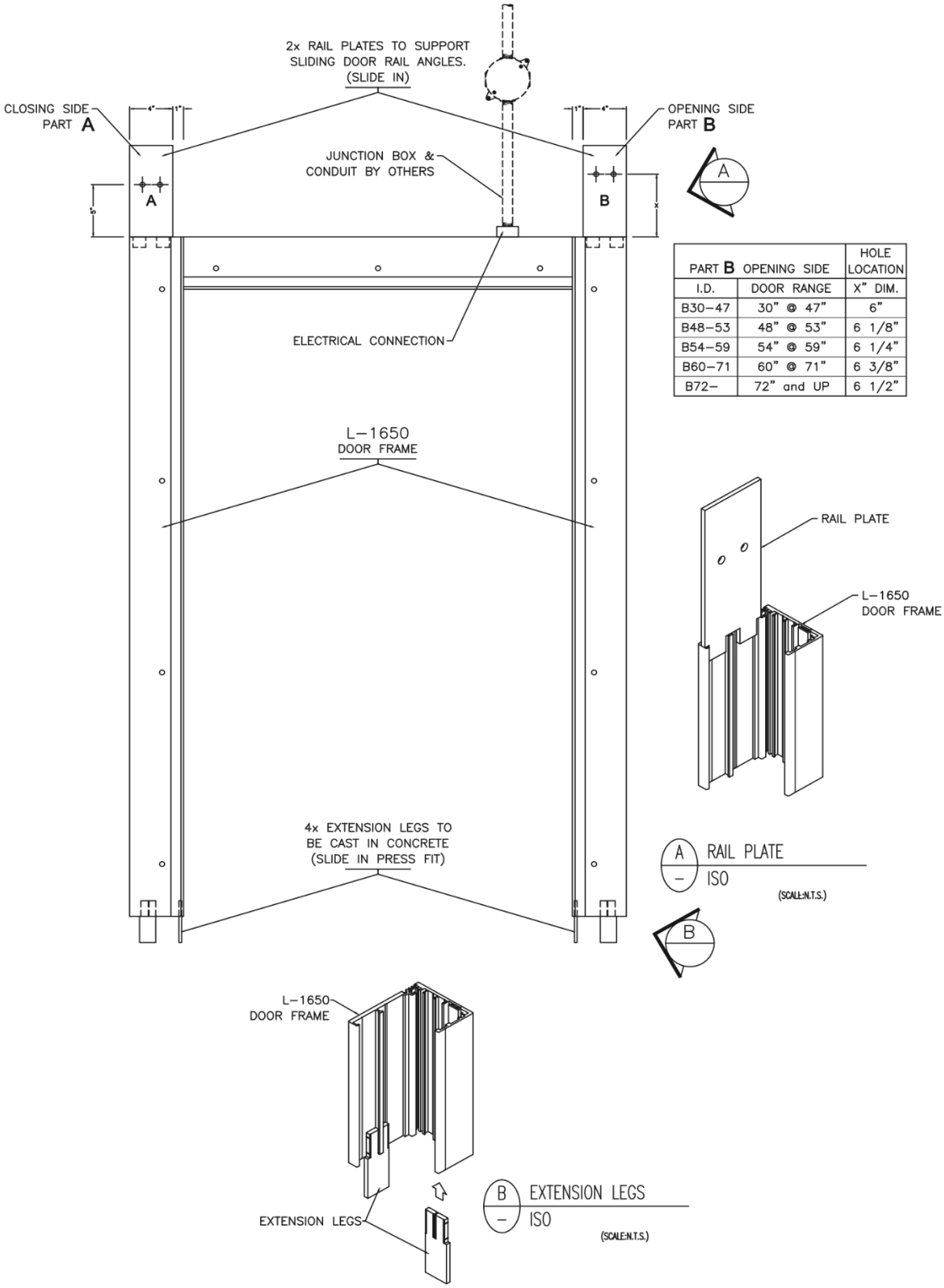

PART B OPENING SIDE		HOLE LOCATION
I.D.	DOOR RANGE	X" DIM.
B30–47	30" @ 47"	6"
B48–53	48" @ 53"	6 1/8"
B54–59	54" @ 59"	6 1/4"
B60–71	60" @ 71"	6 3/8"
B72–	72" and UP	6 1/2"

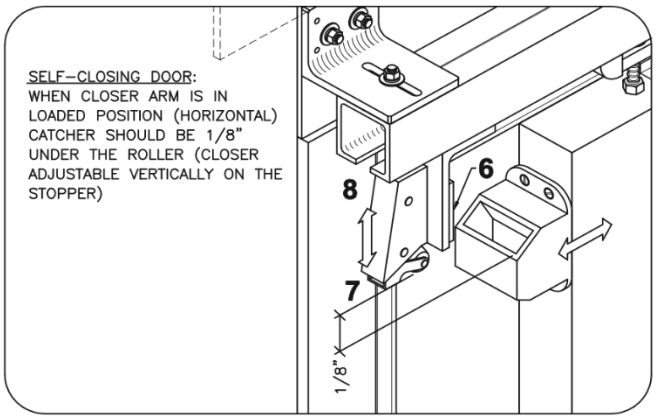
SELF–CLOSING DOOR:
WHEN CLOSER ARM IS IN LOADED POSITION (HORIZONTAL) CATCHER SHOULD BE 1/8" UNDER THE ROLLER (CLOSER ADJUSTABLE VERTICALLY ON THE STOPPER)
8
6
7
1/8"

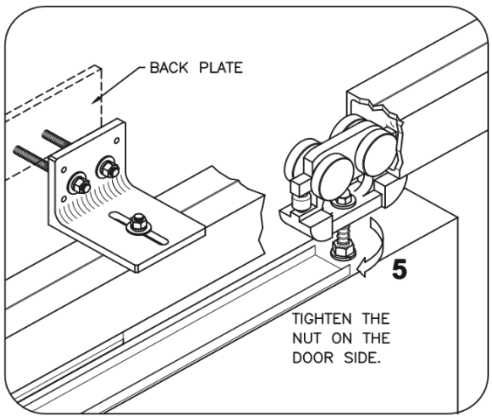
BACK PLATE
5
TIGHTEN THE NUT ON THE DOOR SIDE.

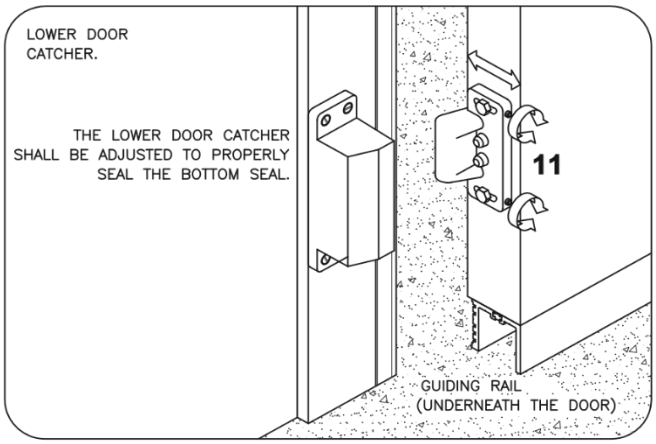
LOWER DOOR CATCHER.
THE LOWER DOOR CATCHER SHALL BE ADJUSTED TO PROPERLY SEAL THE BOTTOM SEAL.
11
GUIDING RAIL (UNDERNEATH THE DOOR)

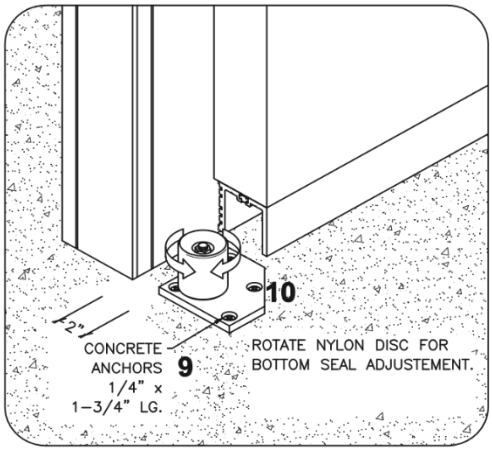
10
2"
CONCRETE ANCHORS 1/4" x 1–3/4" LG.
9
ROTATE NYLON DISC FOR BOTTOM SEAL ADJUSTEMENT.

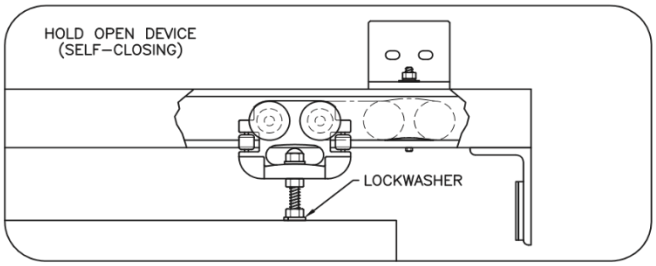
HOLD OPEN DEVICE (SELF–CLOSING)
LOCKWASHER

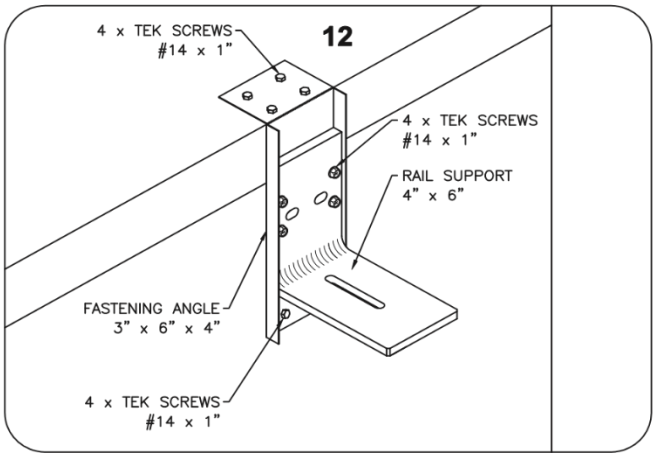
4 x TEK SCREWS #14 x 1"
12
4 x TEK SCREWS #14 x 1"
RAIL SUPPORT 4" x 6"
FASTENING ANGLE 3" x 6" x 4"
4 x TEK SCREWS #14 x 1"

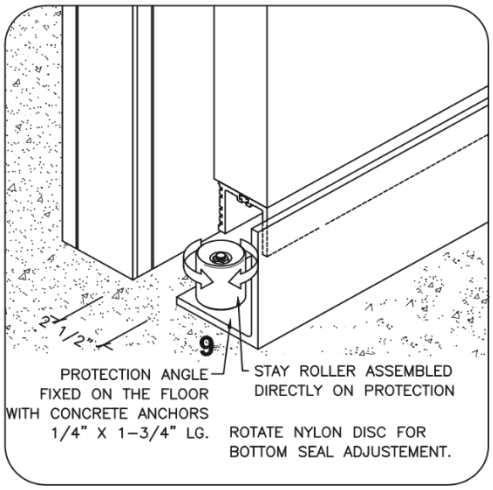
2 1/2"
9
PROTECTION ANGLE FIXED ON THE FLOOR WITH CONCRETE ANCHORS 1/4" X 1–3/4" LG.
STAY ROLLER ASSEMBLED DIRECTLY ON PROTECTION
ROTATE NYLON DISC FOR BOTTOM SEAL ADJUSTEMENT.

NOTE: In order to perform a proper installation of the sliding door, all steps must be followed in the sequence described below. The following instructions refer to the drawing attached.

1° Fasten the aluminum door frame (L-1650) on the side panels (1) with carriage bolts.

2° Fasten the door rail on both sides of frame (3) with carriage bolts through the Panel with the supplied back plates. Holes for the bolts are factories located On the aluminium frame to provide a slight slope on the rail.

3° Fasten the remaining rail support (4) on the reinforced side panel(s) with TEK SCREW #14 x 2".

4° Slide trolleys in the rail (5) and insert trolley bolts on top of door panel Level door and adjust it's height so that bottom of door is at 1/2" of floor, when door is closed. Afterward, make sure that 1/2" locking nuts on trolleys are tightened on door (not on trolley).

5° In closed position, door should overlap its frame of 2" on each side. In open position, door should clear the opening by 1". Adjust the two door stoppers (6) accordingly. NOTE: If door is supplied with a door closer, make sure that the arm of closer is in loaded position (pointing toward the door) before closing the door and adjust the stopper.

6° If included with door, adjust the door closer vertically so that the roller (7) clears the closer-catcher of 1/8" (refer to drawing).

7° Fasten the stay roller on floor with concrete anchors 1/4" x 1 3/4", as per sketch attached (9).

8° To adjust door seals, slide door in closed position. Loosen all bolts holding the rail to rail supports and move rail toward the door frame until the gasket, located on top of door is compressed of 1/8". Then, tighten only the bolts of supports located on each sides of door opening.

9° Rotate stay roller (10) on floor so that the gasket located at the bottom sides of door is compressed of 1/8", when door is closed. The lower door catcher (11) shall be adjusted properly to seal the handle side.

10° Since bottom seal adjustment may have an effect on the top seal adjustment and vice-versa, it might be necessary to perform sequences 8 and 9 again to set the final adjustment.

11° After top and bottom seals are all set, tighten all remaining loose supports on rail.

SELF CLOSING DOORS ONLY:

12° If door closes too fast or too slow, it can be compensated by having the top gasket to rub more or less on frame (rail adjustment).

13° In order to suit various sites condition, the bottom wiper gasket are supplied a little longer. To reduce friction on floor and improve door operation, this gasket might need to be trimmed on site.